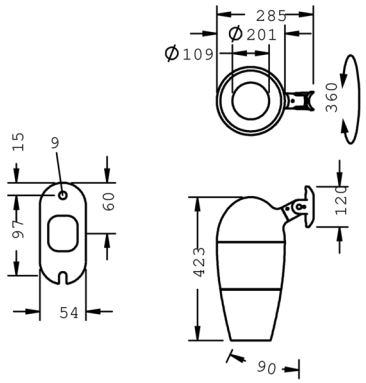

Metaspot Gobo

8 244 264 019

49 W, 1599 lm, 6500 K cold white,
150 mm focal length 14°

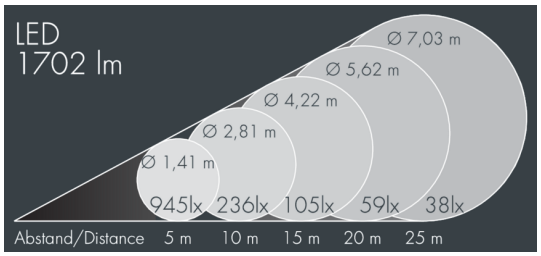

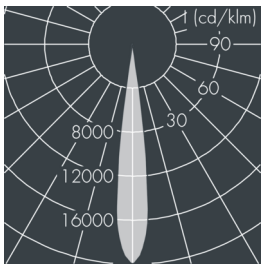

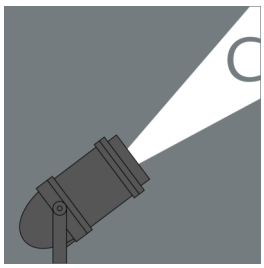

Customized solutions and modifications are possible: Special RAL, DB or NCS colours as polyester powder coat, luminaires in 2700 K and other colour temperatures and versions for high ambient temperature.

Specification text

housing made of corrosion-resistant die-cast aluminum AlSi12, polyester powder coated by high-quality and UV-stabilized coating process, Colour: white RAL 9002, all exterior parts are stainless steel, tempered safety glass, anti-reflective coating from 1 side, dark screenprint, silicon gasket, tool-free twist closure, for installation on poles Ø 60 - 100 mm, tiltable base made of powder coated aluminum, 2 drilled holes Ø 9 mm, spacing 95 mm, 1 centre hole Ø 40 mm, tilt range: 90°, 360° adjustable, cable gland: M20, connecting terminal: 3 pole, focusable projection lens for precise light control and sharp-edged image projections, integral driver (AC/DC), 70,
Beam angle (FWHM): 14°, luminous flux: 1599 lm, wattage: 49 W, delivered lumens 33 lm/W, protection type IP65, protection class I, impact resistance IK08, dimensions: Ø 200 mm, width 423 mm, weight 6.5 kg

The modular luminaire design makes the replacement of components possible. The product meets the demands of the applicable EU guidelines and product safety regulations and bears the CE mark.

IP65 IK08

Specification

Wattage	49 W	Beam angle (FWHM)	14°
Delivered lumens	33 lm/W	Housing colour	white RAL 9002
Light source	LED 6500 K	Protection type	IP65
Color Rendering Index	70	Protection class	I
Control gear	on / off	Impact resistance	IK08
		Dimensions	Ø 200 mm, width 423 mm
		Weight	6,50 kg